D M BRAUN

Quality Furniture for Public Spaces + Custom Designs

23011 Alcalde Dr. Suite G
Laguna Hills, CA 92653
(714)-674-0855
info@dmbraunco.com
dmbraunco.com

ELEMENT PICNIC ENSEMBLE

- STEEL CONSTRUCTION.
- SANDBLASTED, PRIMED & POWDER-COAT FINISH.
- S.S. ANCHOR TABS W/ 1/2" DIA. THRU HOLES FOR ANCHORING.
- S.S. HARDWARE.
- WOOD BOARDS FINISHED WITH CLEAR PENETRATING WOOD SEALER.
- SEAT & TABLETOP BOARDS AVAILABLE IN THE FOLLOWING MATERIALS:
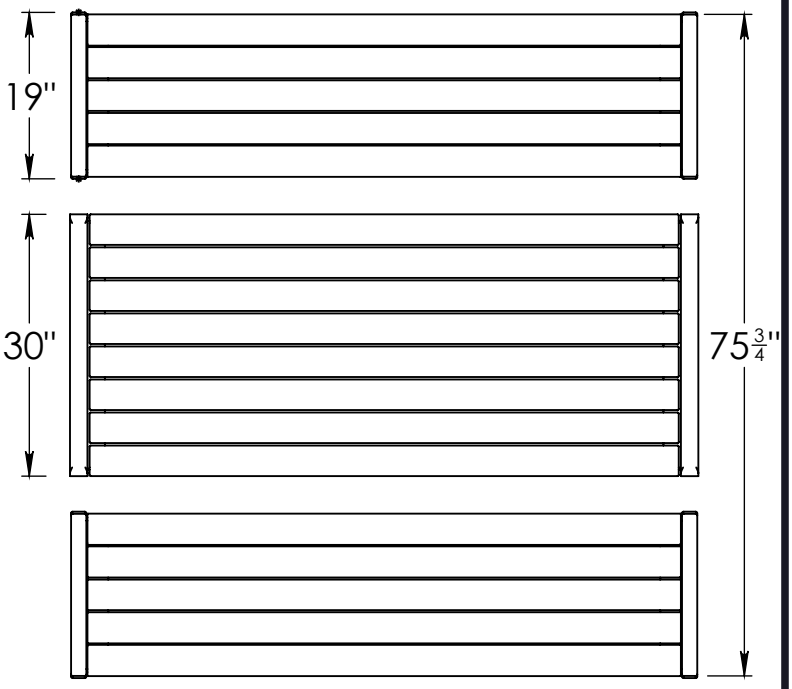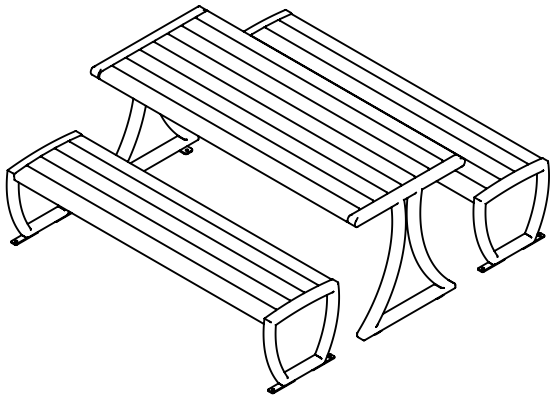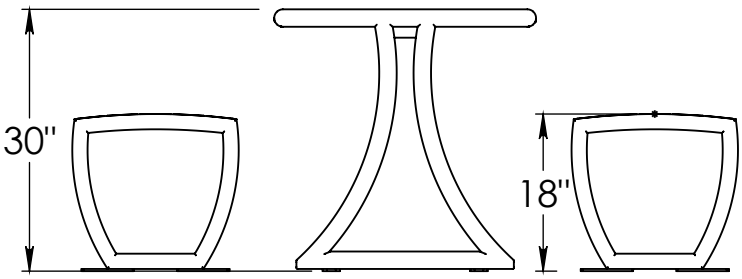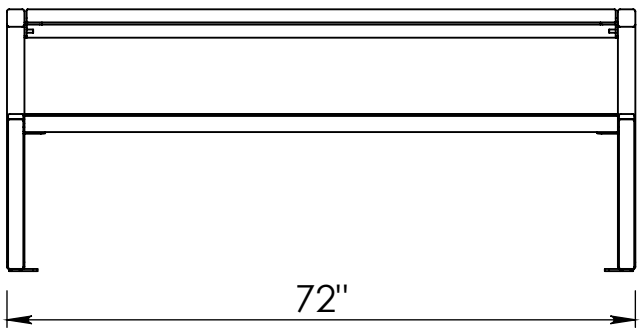
JATOBA IPE THERMORY KEBONY PLASTIC